Isuzu Diesel Engines

4JJ1T

Generator: 67 HP @ 1800 RPM
Industrial Drive: 84 HP @ 2500 RPM

Standard features:

- U.S. EPA Tier 3
- Displacement: 3.0 L
- Turbo charged
- Peak torque: 213.0 LB/FT @ 1800 RPM
- Fuel consumption: .355 LB/HP-HR
- Flywheel housing: SAE 3
- Electric & self-priming fuel lift pump
- 12V and 24V available
- Glow plug starting aid
- High angularity oil pan
- 500-hour service intervals
- 5-year / 5,000-hour warranty

The power behind it all.

ISUZU
DIESEL

Isuzu Diesel Engines

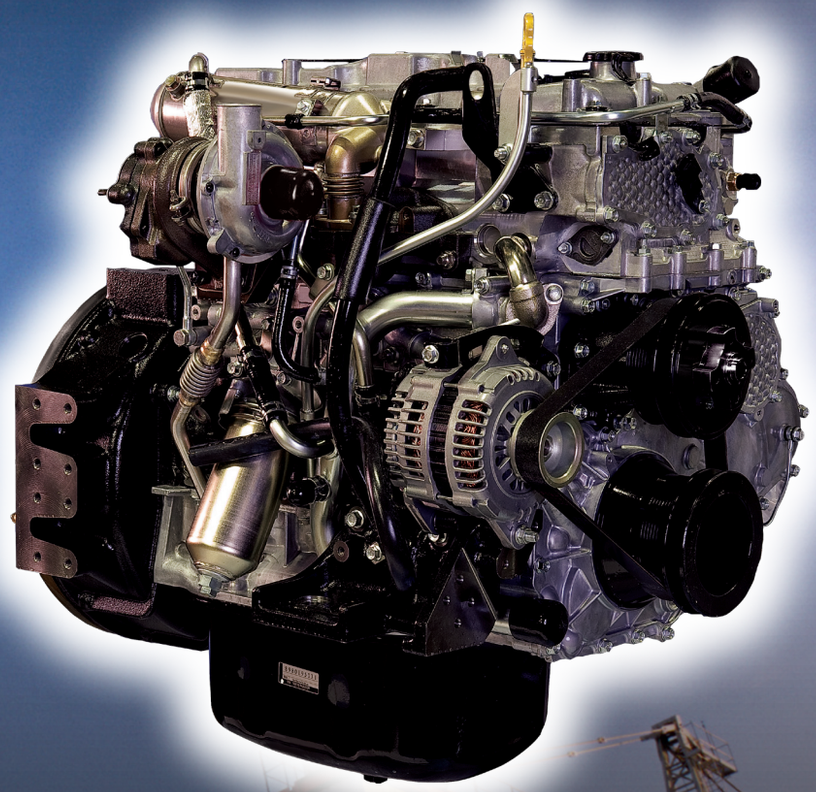

4JJ1T

Generator: 67 HP @ 1800 RPM
Industrial Drive: 84 HP @ 2500 RPM

Standard features:

- U.S. EPA Tier 3
- Displacement: 3.0 L
- Turbo charged
- Peak torque: 213.0 LB/FT @ 1800 RPM
- Fuel consumption: .355 LB/HP-HR
- Flywheel housing: SAE 3
- Electric & self-priming fuel lift pump
- 12V and 24V available
- Glow plug starting aid
- High angularity oil pan
- 500-hour service intervals
- 5-year / 5,000-hour warranty

The power behind it all.

ISUZU
DIESEL

Isuzu Diesel Engines

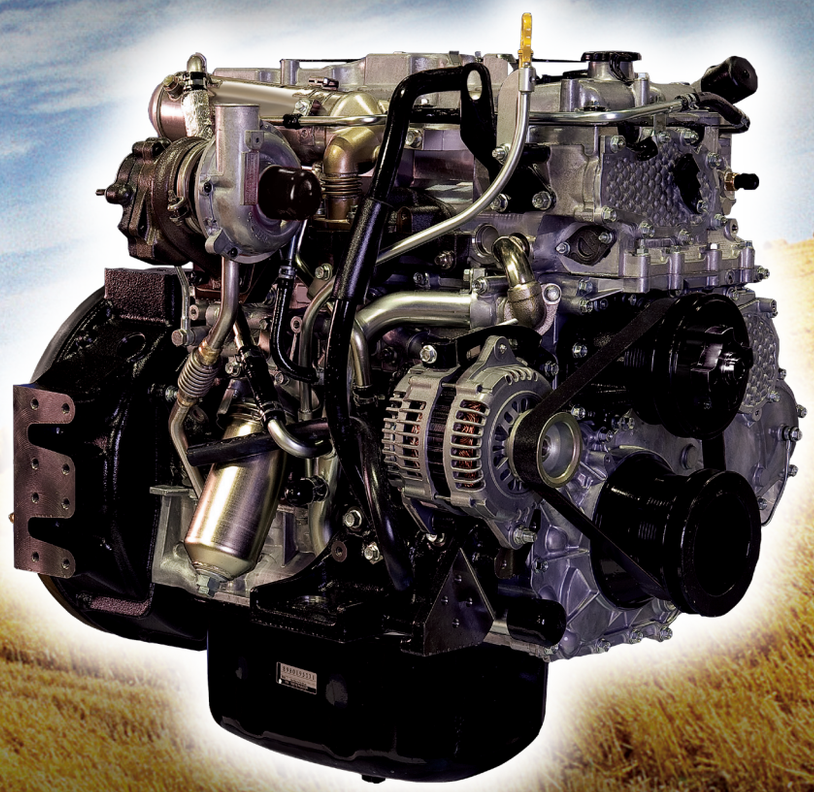

4JJ1T

Generator: 67 HP @ 1800 RPM
Industrial Drive: 84 HP @ 2500 RPM

Standard features:

- U.S. EPA Tier 3
- Displacement: 3.0 L
- Turbo charged
- Peak torque: 213.0 LB/FT @ 1800 RPM
- Fuel consumption: .355 LB/HP-HR
- Flywheel housing: SAE 3
- Electric & self-priming fuel lift pump
- 12V and 24V available
- Glow plug starting aid
- High angularity oil pan
- 500-hour service intervals
- 5-year / 5,000-hour warranty

The power behind it all.

ISUZU
DIESEL

4JJ1T Industrial Performance Curves:

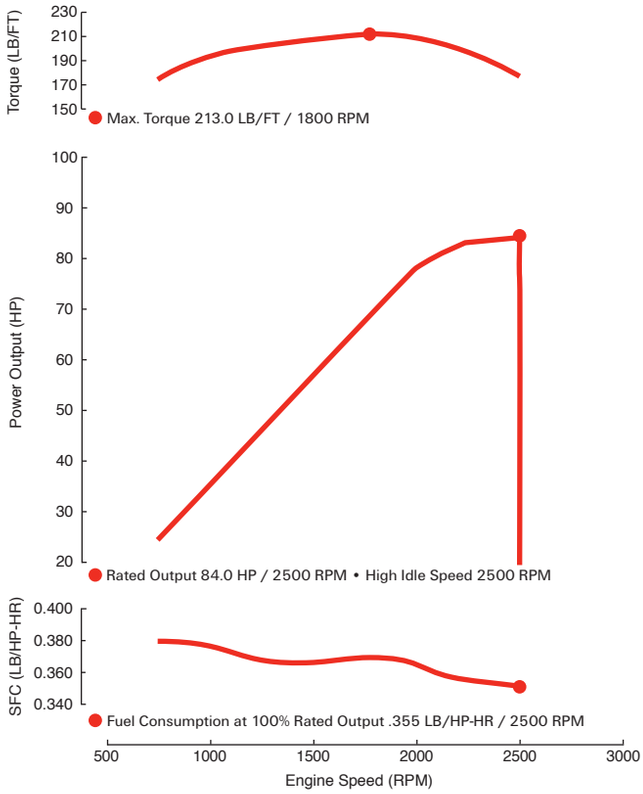

4JJ1T Genset Performance Curves:

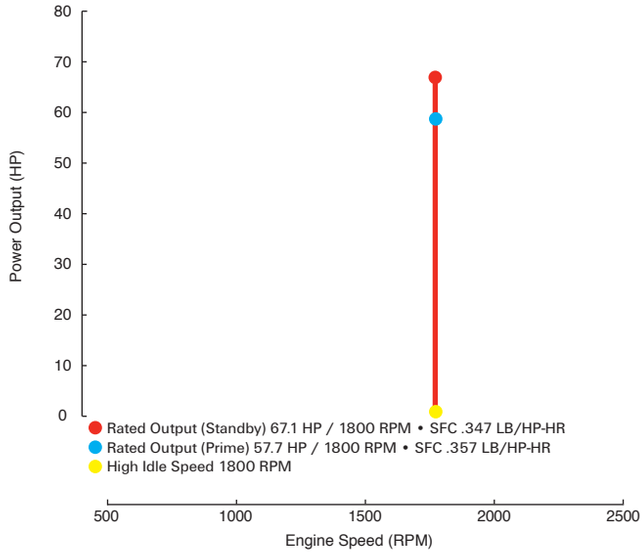

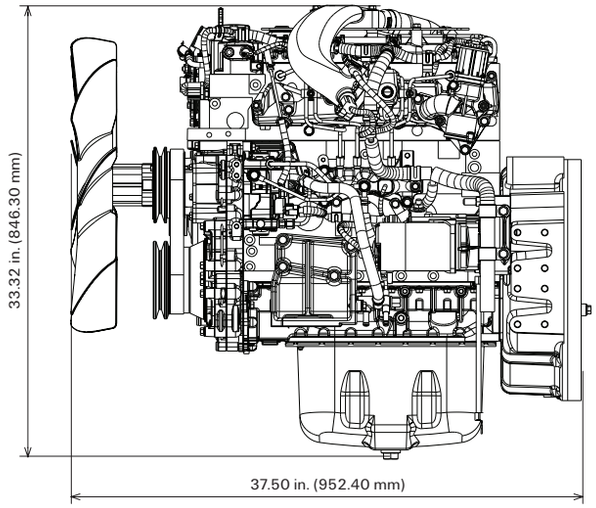

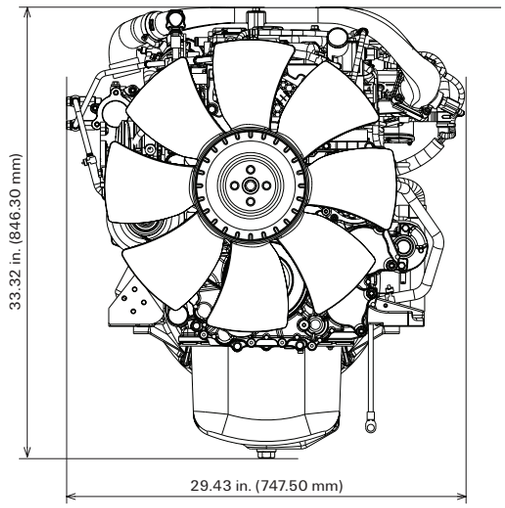

Available options:

- Cooling system
- Air cleaner
- Exhaust system
- Front and rear mounts
- Skid base
- Instrument panel & extension harness
- Custom power unit

Horsepower comparison:

Engine Model	Cylinders	Displacement (L)	HP Range
4LE1T	4	2.2	40-60
4JJ1T	4	3.0	65-90
4JJ1X	4	3.0	75-130

For additional information, please contact your local distributor or visit www.isuzuengines.com

Isuzu Motors America, LLC
46401 Commerce Center Drive
Plymouth, Michigan 48170
Phone: 734.582.9470
Fax: 734.455.7581

ILS-4JJ1T-E

www.isuzuengines.com